HEAD DIMENSIONS

100º Flat Undercut Truss Six-Lobe

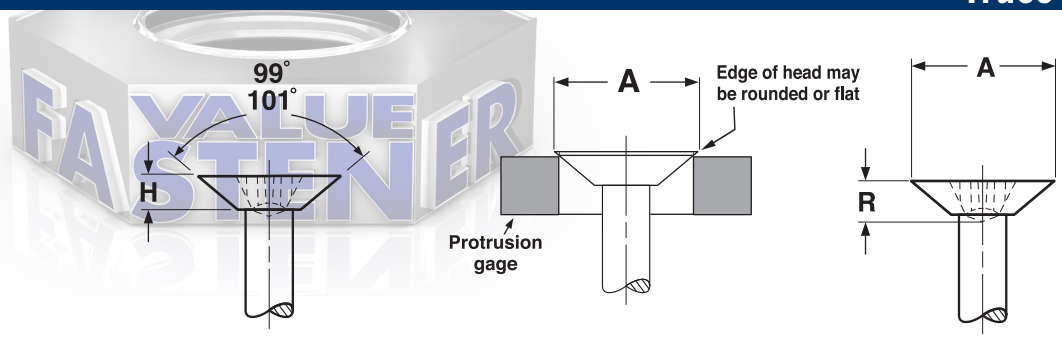

Phillips Undercut 100° Flat Heads for Machine Screws

Nominal Size	A		H		R		Phillips Driver Size
	Head Diameter		Head Height		Recess Depth		
	Max	Min	Max	Min	Max	Min	
4	.212	.188	.047	.038	.071	.055	1
6	.262	.235	.059	.048	.067	.044	2
8	.312	.282	.070	.058	.095	.072	2
10	.362	.329	.081	.068	.110	.087	2
12	.412	.375	.092	.077	.104	.081	3

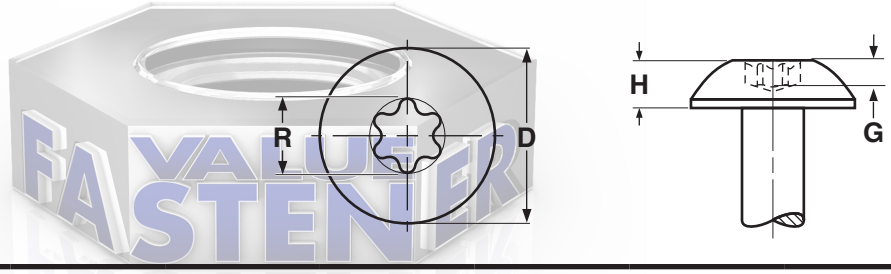

Six-Lobe Truss Heads

ASME B18.6.3-2010

Screw Size	D		H		R	G		Driver Size
	Head Dimensions				Recess Dimensions			
	Head Diameter		Head Height		Ref	Gauge Penetration Min	(Fallaway) Max Penetration	
	Max	Min	Max	Min				
4*	.257	.241	.069	.059	-	-	-	T9
6	.321	.303	.086	.074	.111	.045	.022	T10
8	.384	.364	.102	.088	.132	.045	.026	T15
10	.448	.425	.118	.103	.155	.055	.031	T20
12	.511	.487	.134	.118	.178	.070	.036	T25
1/4	.573	.546	.150	.133	.200	.070	.040	T27
5/16	.698	.666	.183	.162	.266	.080	.047	T40
3/8	.823	.787	.215	.191	.312	.110	.055	T45

*Dimensions for the #4 diameter Six-Lobe Truss head are independent of ASME B18.6.3